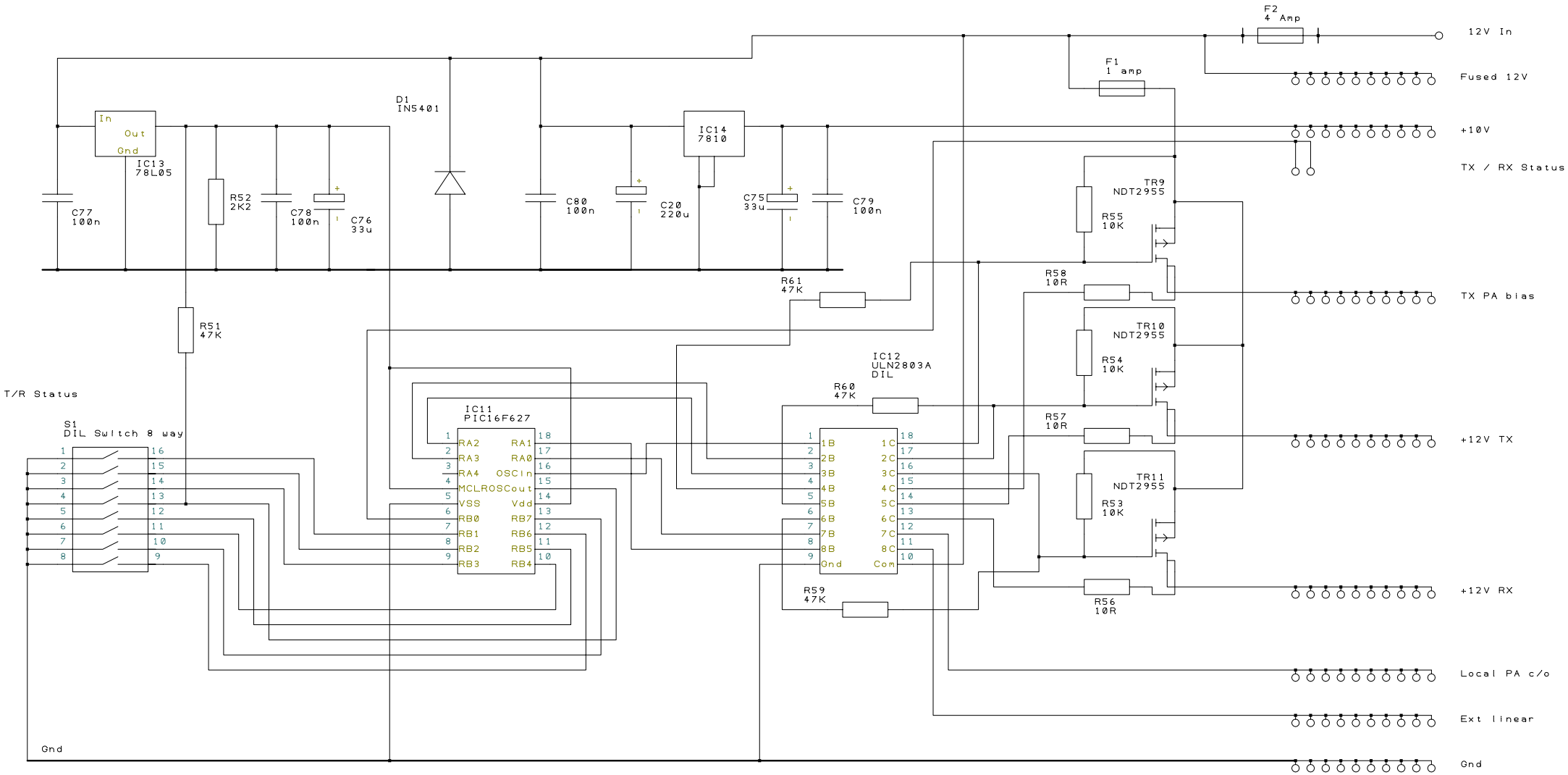
F2
4 Amp
12V In
F1
1 amp
Fused 12V
D1
IN5401
IC14
7810
+10V
TX / RX Status
In
Out
Gnd
IC13
78L05
C77
100n
R52
2K2
C78
100n
C76
33u
C80
100n
C20
220u
C75
33u
C79
100n
TR9
NDT2955
R55
10K
R58
10R
TX PA bias
R61
47K
R51
47K
TR10
NDT2955
R54
10K
IC12
ULN2803A
DIL
R60
47K
T/R Status
IC11
PIC16F627
R57
10R
+12V TX
S1
DIL Switch 8 way
TR11
NDT2955
R53
10K
R59
47K
R56
10R
+12V RX
Local PA c/o
Ext linear
Gnd
Gnd